BLOCKI

MANUAL

000

MYPOLICE

6+

PP2012

COMPATIBLE WITH OTHER BRANDS

1

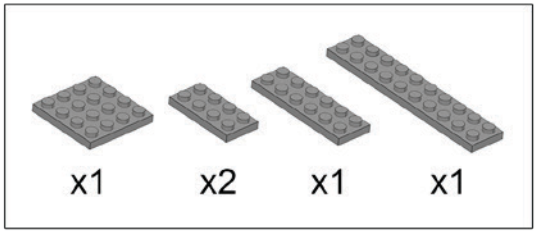

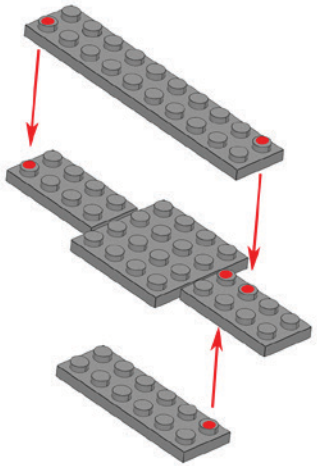

2

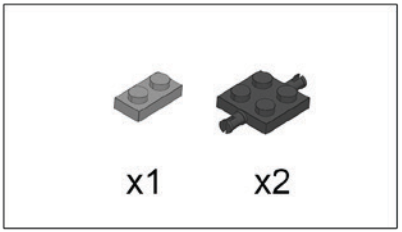

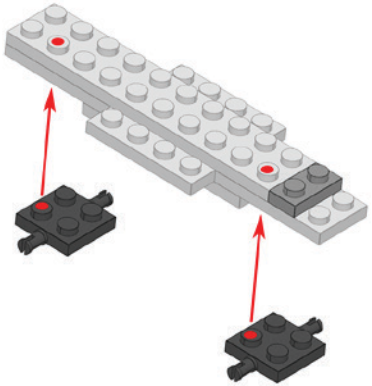

3

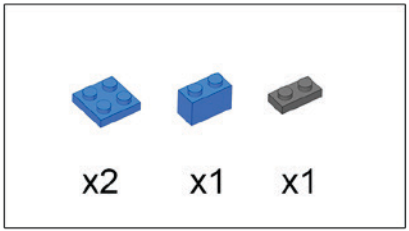

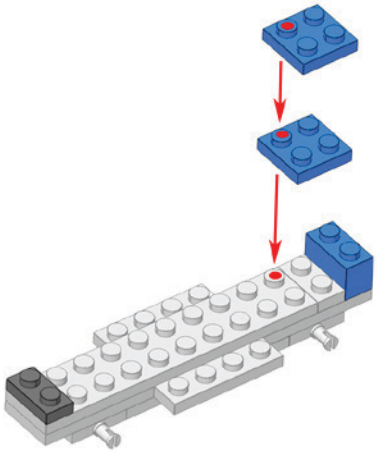

4

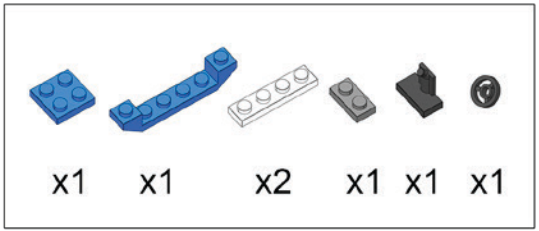

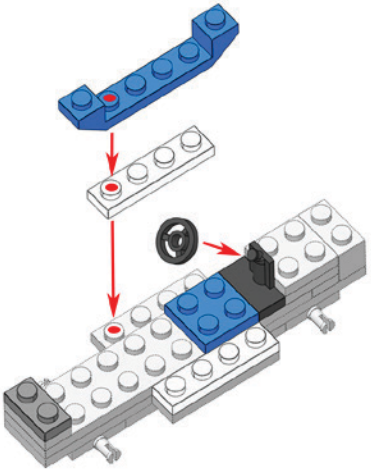

5

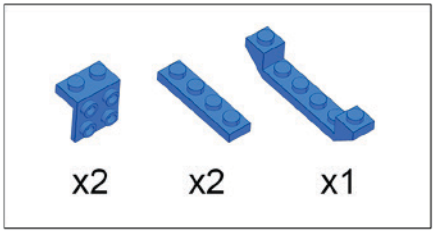

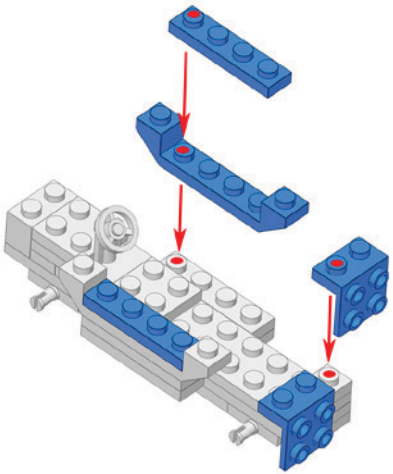

6

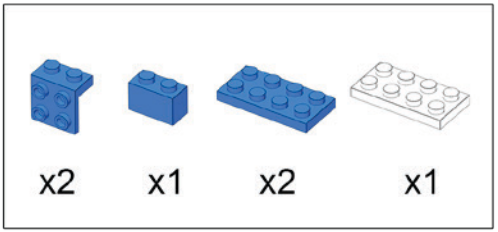

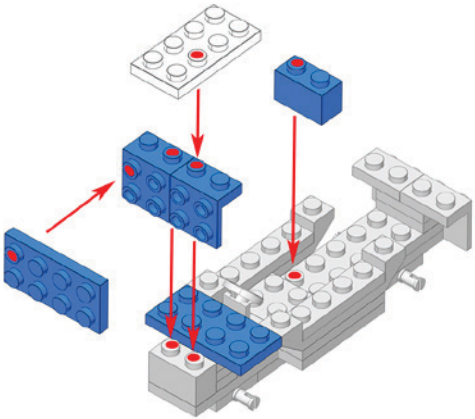

7

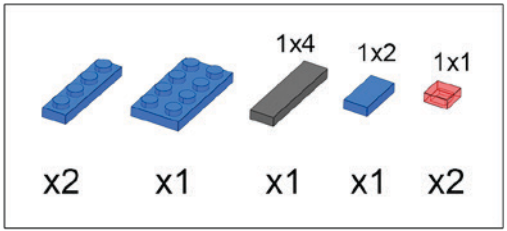

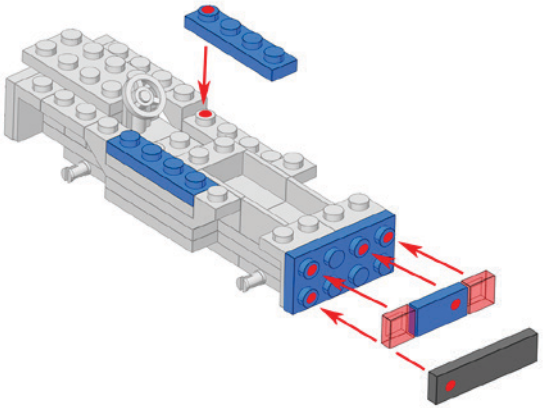

8

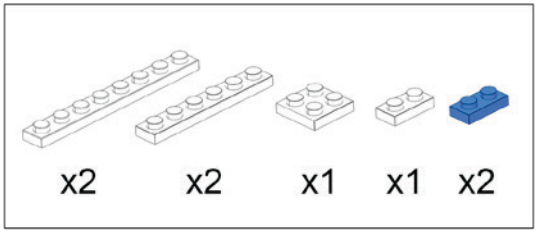

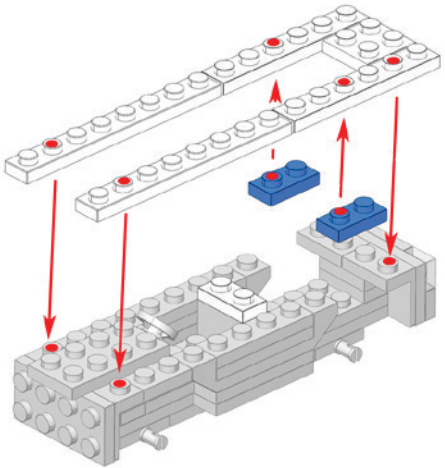

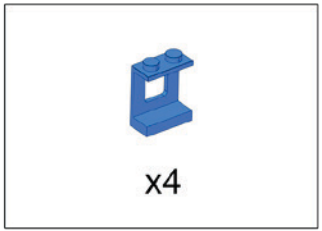
x4

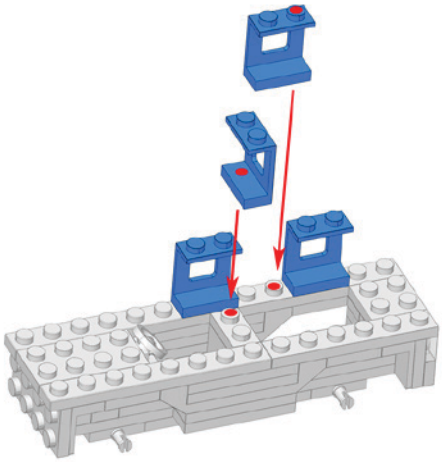

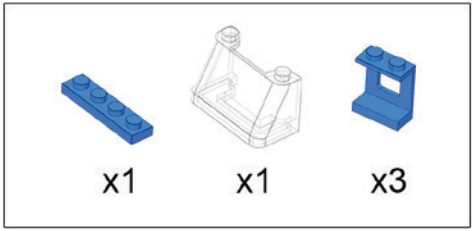
x1
x1
x3

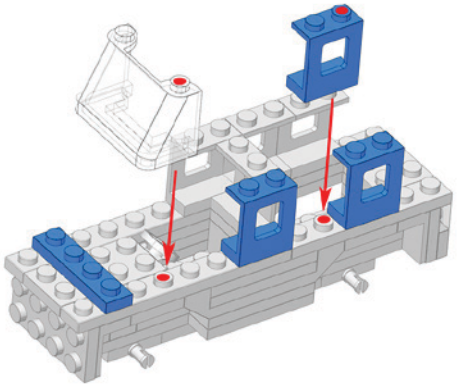

11

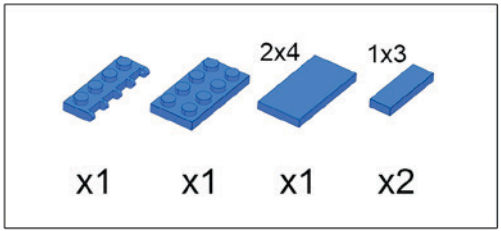

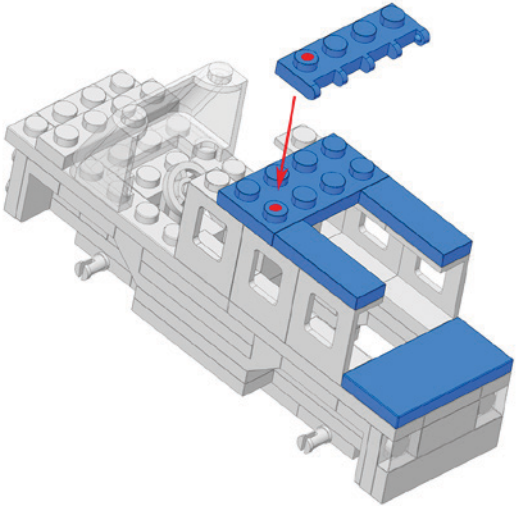

12

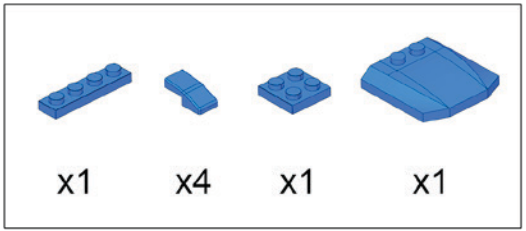

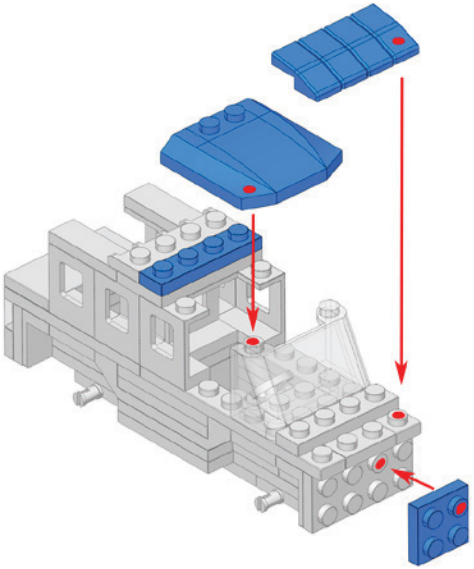

13

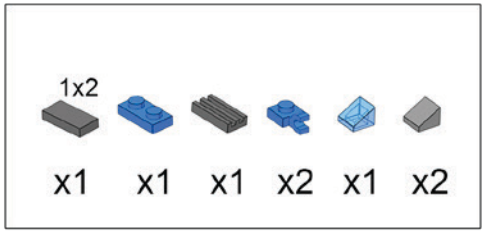

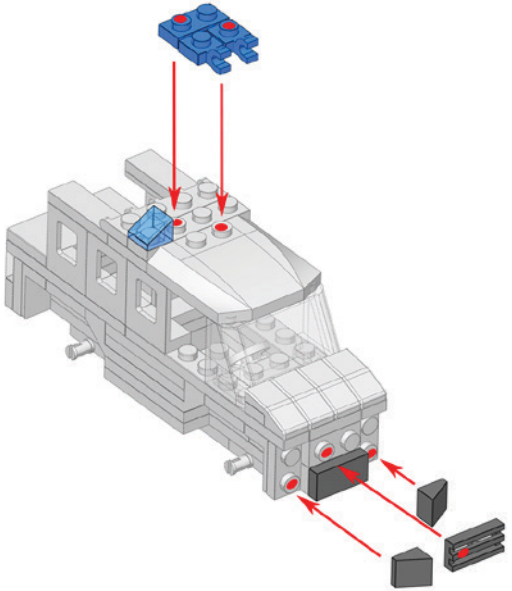

14

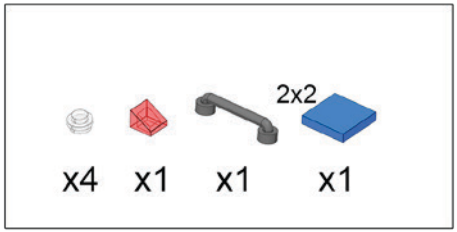

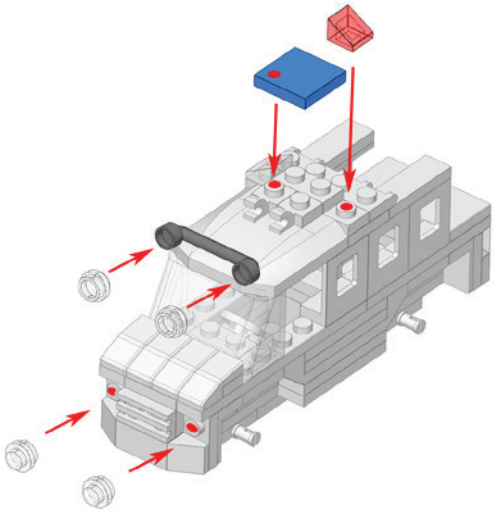

15

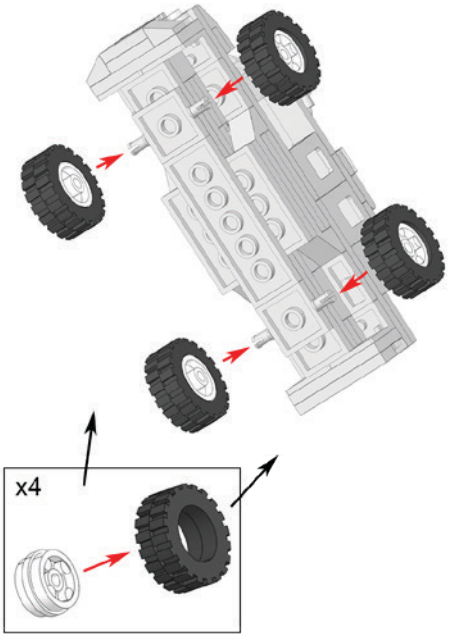

16

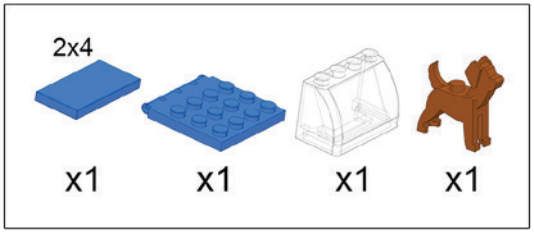

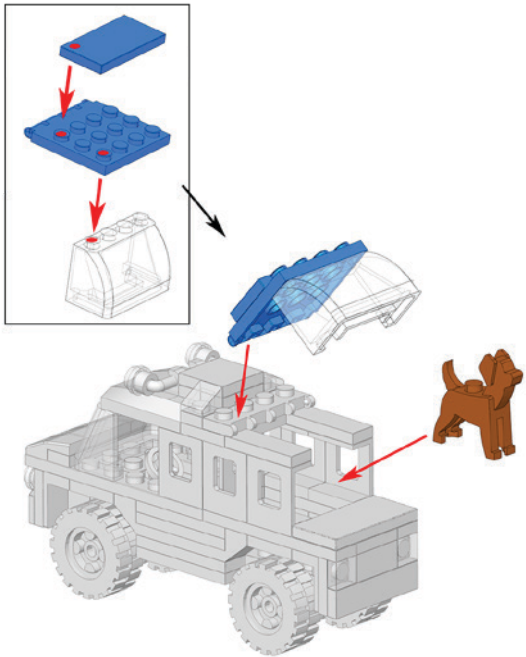

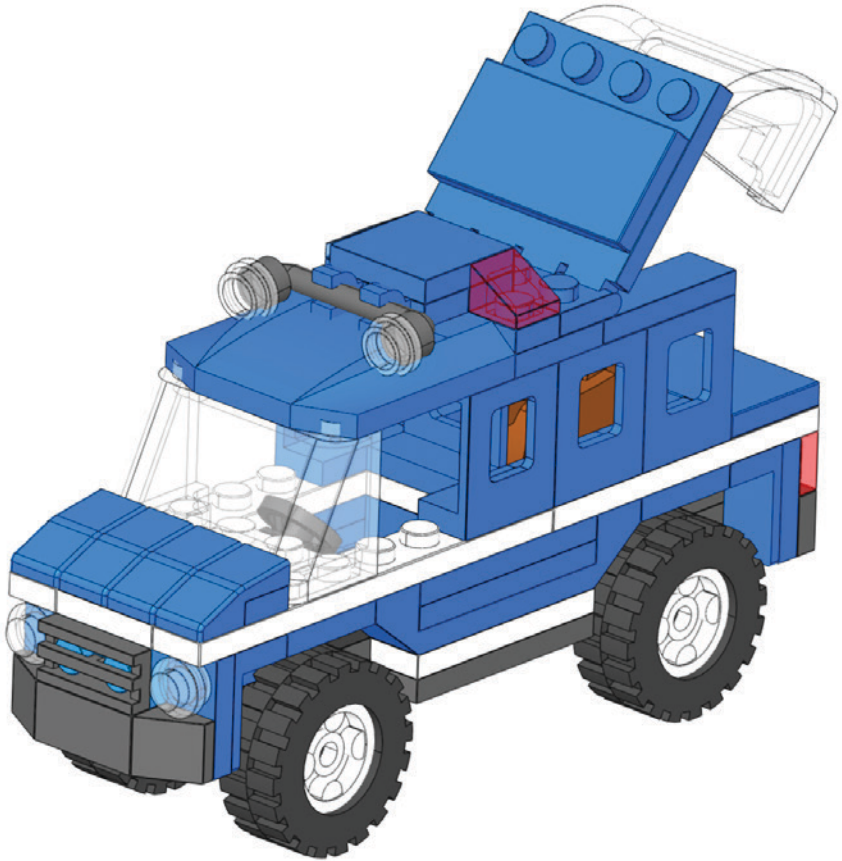

PP2010

PP2011

PP2013

PP1010

PP1011

PP1012

PP1014

PP1015

PP3010

PP3012

PP3013

PP3014

www.blocki.fun

PP2012